CORDLESS DRIVER DRILL

BD-1025CR(K)

LANDSCAPEPOWER.COM

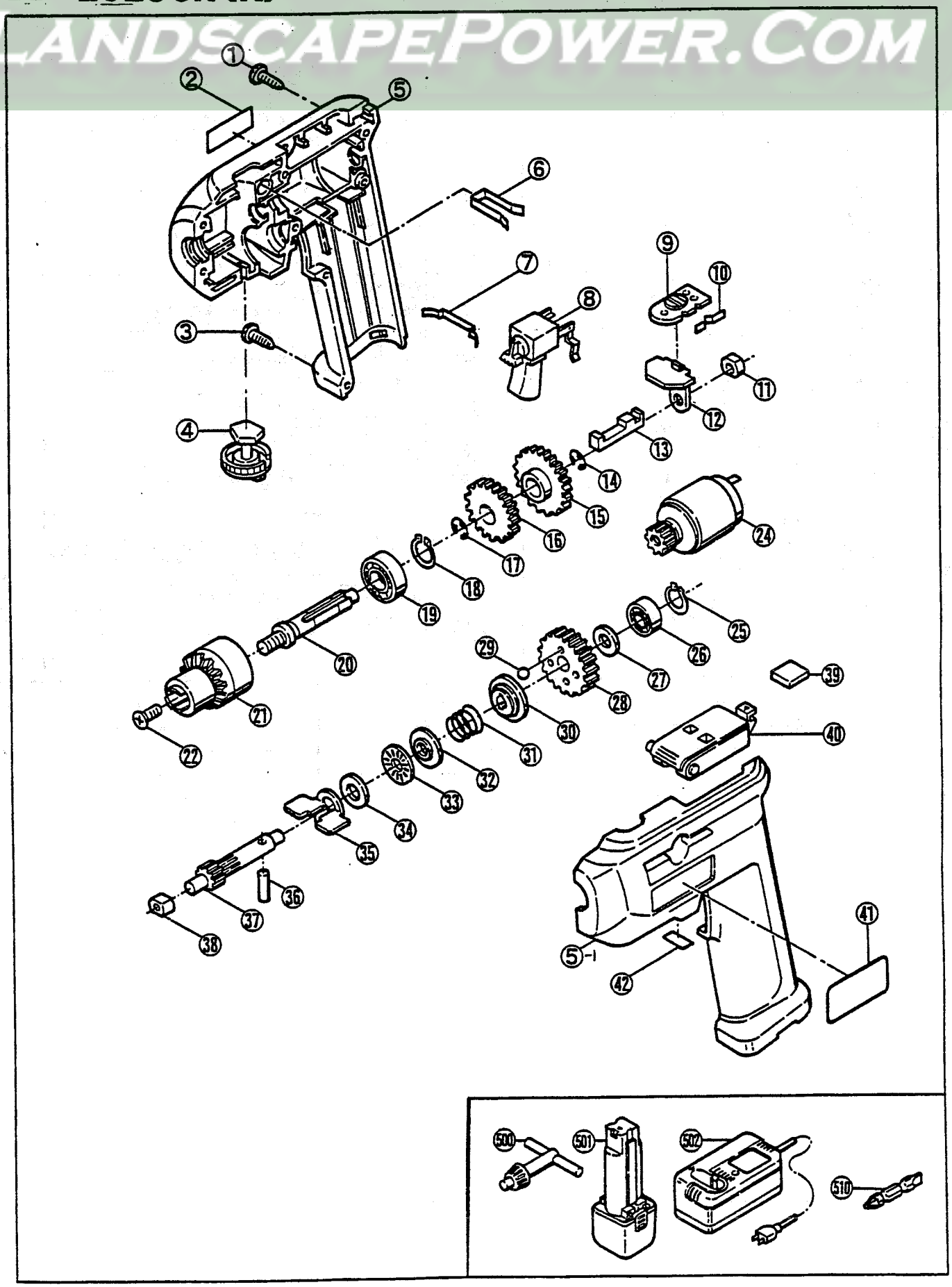

PARTS LIST FOR AFTER SALES SERVICE
MODEL BD1025CR, BD1025CVR

REF	PART NO.	DESCRIPTION	QTY	REF	PART NO.	DESCRIPTION	QTY
1	9060420	TAPPING SCREW (B) M4X20	7	25	9510600	RETAINING RING S-6	1
2	6912993	NAME PLATE BD1025CR	1	26	9810626	BALL BEARING #626Z	1
—	6912997	NAME PLATE BD1025CVR	1	27	6900310	COLLAR	1
3	9060430	TAPPING SCREW (B) M4X30	1	28	6200182	INTERMEDIATE GEAR	1
4	6830839	CLUTCH KNOB	1	29	6290053	STEEL BALL 3/16"	4
5	6801036	HOUSING (B)	1	30	6190082	CLUTCH	1
5-1	6801031	HOUSING (A)	1	31	6180150	COMPRESSION SPRING	1
6	6151151	KEY HOLDER	1	32	6151145	THRUST PLATE	1
7	6180165	BAND	1	33	6750030	THRUST BEARING	1
8	6550041	REVERSIBLE SWITCH BD1025CR	1	34	6900311	THRUST WASHER	1
—	6550401	VSR SWITCH BD1025CVR	1	35	6090182	GUIDE	1
9	6360356	CHANGE LEVER	1	36	6290001	NEEDLE ROLLER PIN	1
10	6180151	PLATE SPRING	1	37	6050051	INTERMEDIATE SHAFT	1
11	6760065	OILLESS METAL	1	38	6760065	OILLESS METAL	1
12	6151202	GUIDE PLATE	1	39	6370155	SPONGE	1
13	6100161	PARALLEL KEY	1	40	6360357	BIT CASE	1
14	6100138	RETAINING RING E-8	1	41	6921145	BRAND SEAL	1
15	6200184	FINAL GEAR (B)	1	42	6920430	SEAL	1
16	6200183	FINAL GEAR (A)	1	43	6920048	ELECTRONIC LABEL BD1025CV	1
17	6100138	RETAINING RING E-8	1				
18	9511000	RETAINING RING S-10	1				
19	989377002	BALLL BEARING #6000Z	1		STANDARD ACCESSORIES		
20	6110109	GEAR SHAFT	1	500	6241103	CHUCK KEY	1
21	6071573	DRILL CHUCK SET	1	501	6400123	BATTERY 9.6V	1
22	6130388	FLAT SCREW (L.H.T.) M5X16	1	502	6402273	CHARGER	1
24	6032275	MOTOR COMPLETE	1				

SERVICE NOTES: