CORDLESS DRIVER DRILL

BD-1020CR, BD-1020CVR

LANDSCAPEPOWER.COM

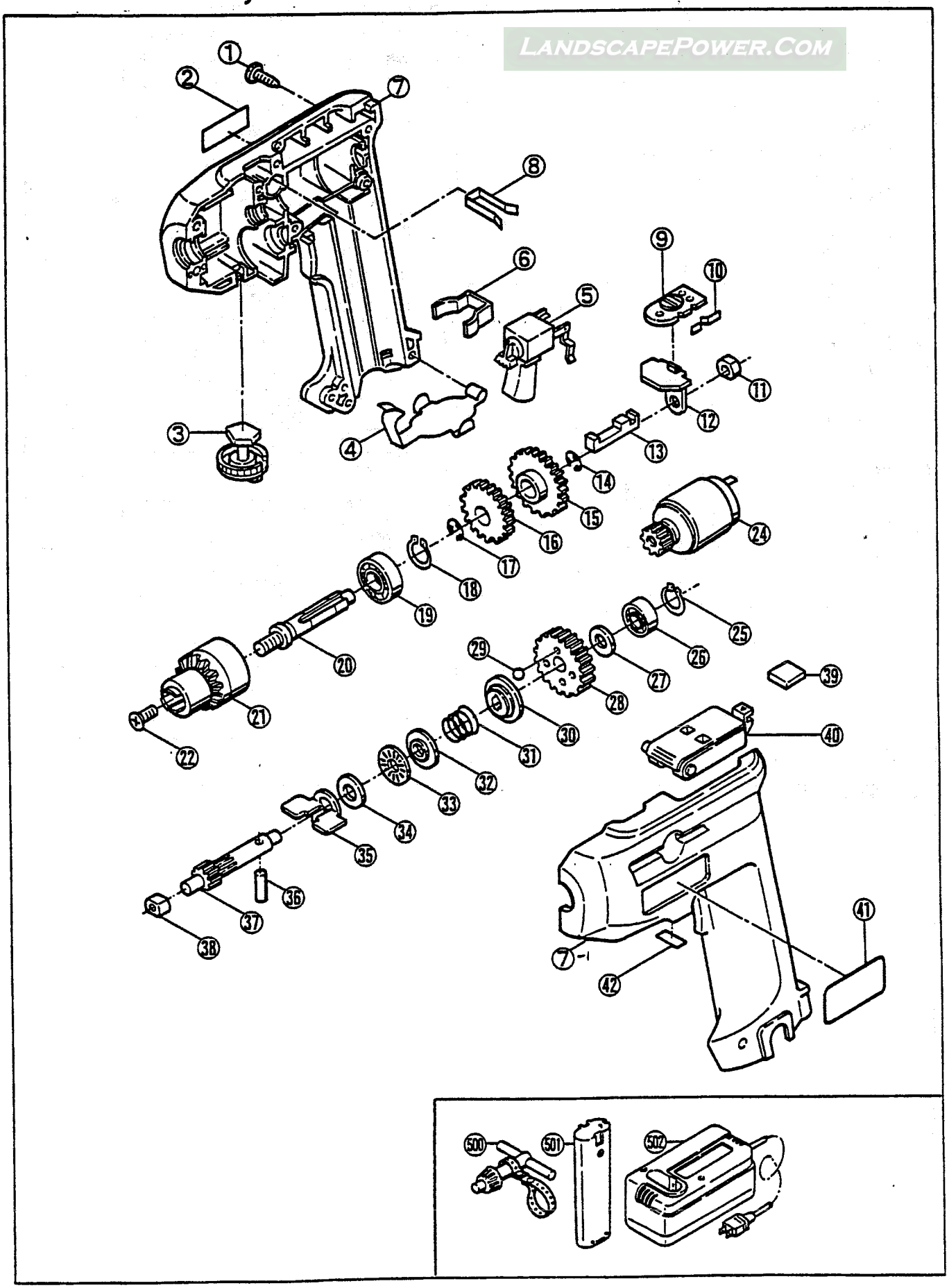

PARTS LIST FOR AFTER SALES SERVICE
MODEL BD1020CR, BD1020CVR

REF	PART NO.	DESCRIPTION	QTY	REF	PART NO.	DESCRIPTION	QTY
1	9060420	TAPPING SCREW (B) M4X20	7	24	6032225	MOTOR COMPLETE	1
2	6912858	NAME PLATE BD1020CR	1	25	9510600	RETAINING RING S-6	1
—	6913007	NAME PLATE BD1020CVR	1	26	9810626	BALL BEARING #626Z	1
3	6830773	CLUTCH KNOB	1	27	6900310	COLLAR	1
4	6180153	COVER PLATE	1	28	6200499	INTERMEDIATE GEAR	1
5	6550239	SWITCH BD1020CR	1	29	6290053	STEEL BALL 3/16"	4
—	6550390	SWITCH BD1020CVR	1	30	6190082	CLUTCH	1
6	6180154	BAND	1	31	6180150	COMPRESSION SPRING	1
7	6801752	HOUSING (B)	1	32	6151145	THRUST PLATE	1
7-1	6801749	HOUSING (A)	1	33	6750030	THRUST BEARING	1
8	6151151	KEY HOLDER	1	34	6900311	THRUST WASHER	1
9	6360356	CHANGE LEVER	1	35	6090182	GUIDE	1
10	6180151	PLATE SPRING	1	36	6290001	NEEDLE ROLLER PIN	1
11	6760065	OILLESS METAL	1	37	6050035	INTERMEDIATE SHAFT	1
12	6151148	GUIDE PLATE	1	38	6760065	OILLESS METAL	1
13	6100161	PARALLEL KEY	1	39	6370155	SPONGE	1
14	6100138	RETAINING RING E-8	1	40	6360357	BIT CASE	1
15	6200180	FINAL GEAR (B)	1	41	6921083	BRAND SEAL	1
16	6200179	FINAL GEAR (A)	1	42	6920430	SEAL	1
17	6100138	RETAINING RING E-8	1				
18	9511000	RETAINING RING S-10	1	STANDARD ACCESSORIES			
19	9816000	BALLL BEARING #6000Z	1	500	6241103	CHUCK KEY	1
20	6110109	GEAR SHAFT	1	501	6402493	BATTERY 7.2V	1
21	6071573	DRILL CHUCK SET	1	502	6402163	CHARGER	1
22	6130388	FLAT SCREW (L.H.T.) M5X16	1				

SERVICE NOTES:

LANDSCAPEPOWER.COM