7.2V CENTER HANDLE DRILL

20007

LANDSCAPEPOWER.COM

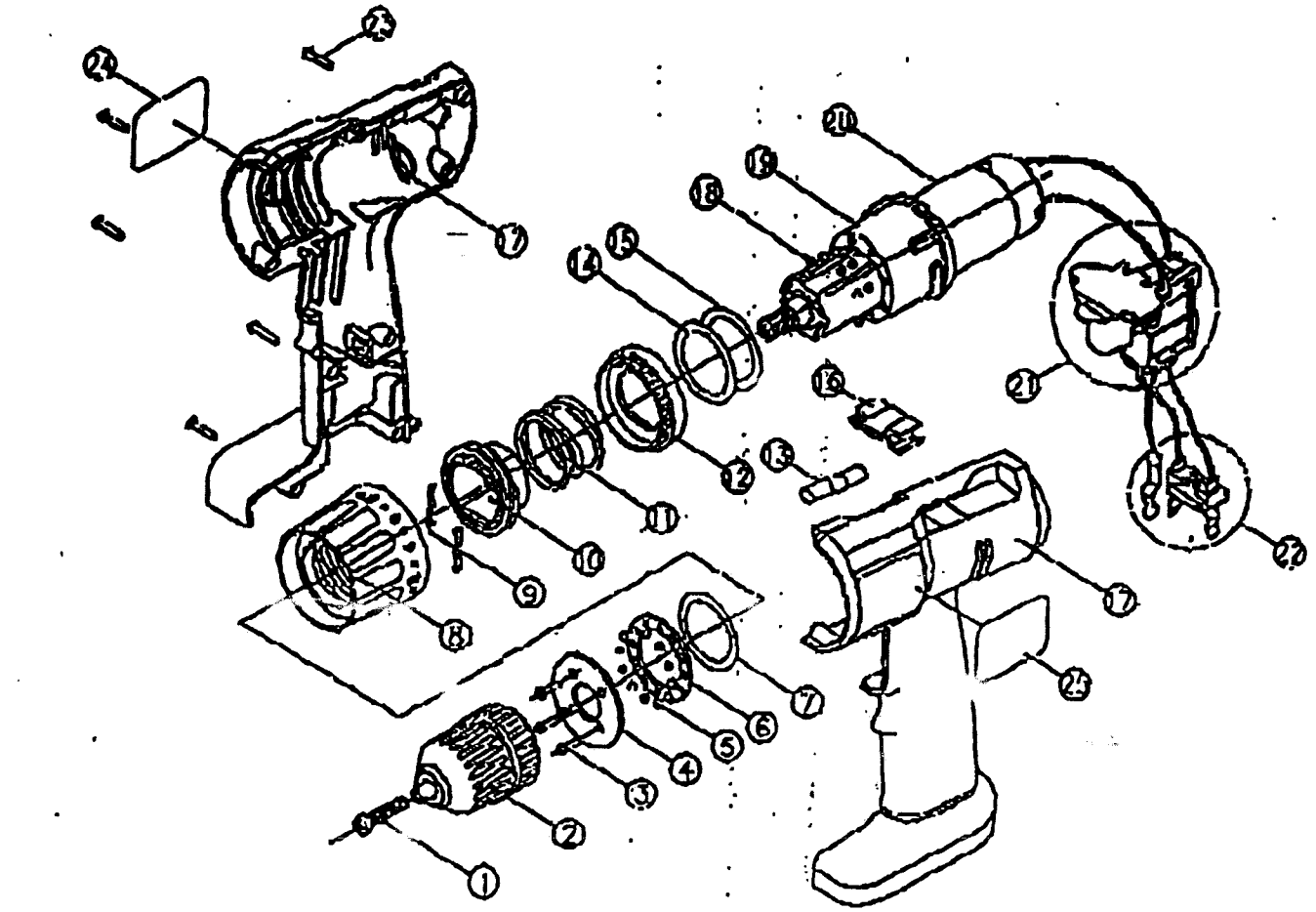

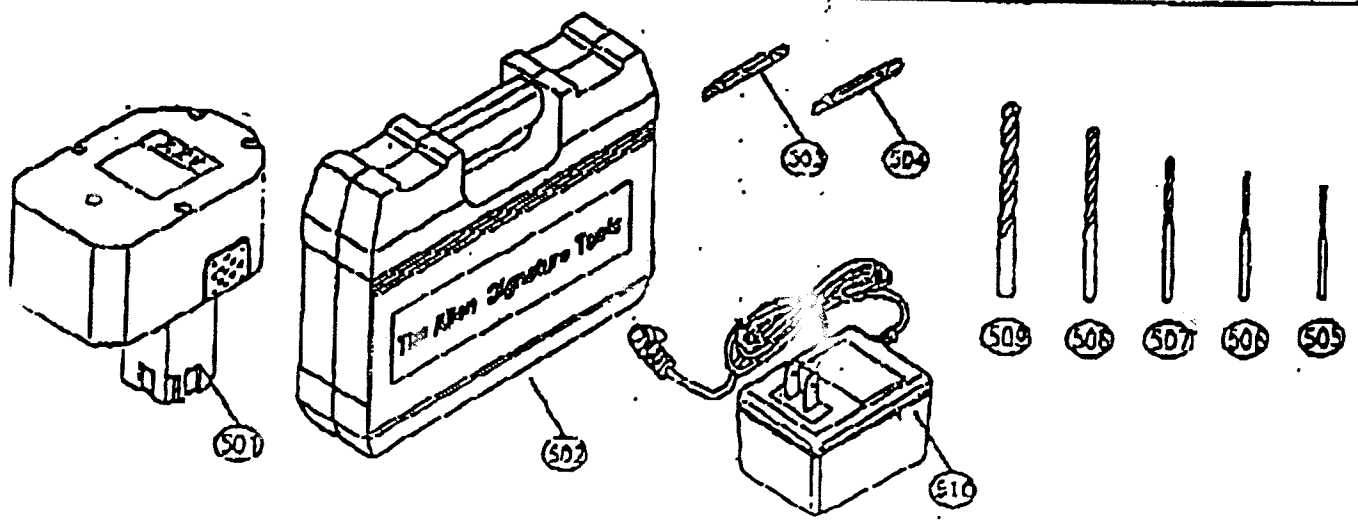

REF	PART NO.	DESCRIPTION	QTY	REF	PART NO.	DESCRIPTION	QTY
1	1130049	SCREW M5X0.8X26MM	1				
2	1940015	CHUCK	1	501	20012	7.2V BATTERY PACK	1
3	1130302	SCREW M3X14	4	502	4770041	CARRYING CASE	1
4	4900094	MOUNTING PLATE	1	503	4240014	DOUBLE BIT #2	1
5	1290021	STEEL BALL 3MM	8	504	4240015	DOUBLE BIT #3	1
6	4190002	BALL HOLDER, PLASTIC	1	505	4240016	DRILL HSS FH 2.5X53MM	1
7	4900095	WASHER	1	506	4240017	DRILL HSS FH 3.0X65MM	1
8	4900116	CLUTCH CAP	1	507	4240018	DRILL HSS FH 4.0X75MM	1
9	4160026	SPRING PLATE	2	508	4240019	DRILL HSS FH 5.0X90MM	1
10	4900097	PLASTIC SLEEVE	1	509	4240020	DRILL HSS FH 6.0X102MM	1
11	4160030	TORQUE SPRING	1	510	DU41110040C	ADAPTOR,120V-AC	1
12	4360009	LOCATION CUP, PLASTIC	1				
13	4950034	LEVELLER ASSY	1				
14	4900099	CLUTCH WASHER	1				
15	4900104	STAINLESS WASHER	1				
16	4360006	BIT HOLDER	1				
17	4800045	HOUSING	1				
18	4750013	STEEL BALL 4MM	16				
19	4050010	GEAR BOX	1				
20	4030018	MOTOR ASSY	1				
21	4550042	SWITCH ASSY 2-SPEED	1				
22	4560027	CONTACT PLATE HOLDER	1				
23	1130304	SET SCREW	8				
24	4910061	RATING LABEL	1				
25	4910062	BRAND LABEL	1				

SERVICE NOTES

LANDSCAPEPOWER.COM