JIG SAW

20002

LANDSCAPEPOWER.COM

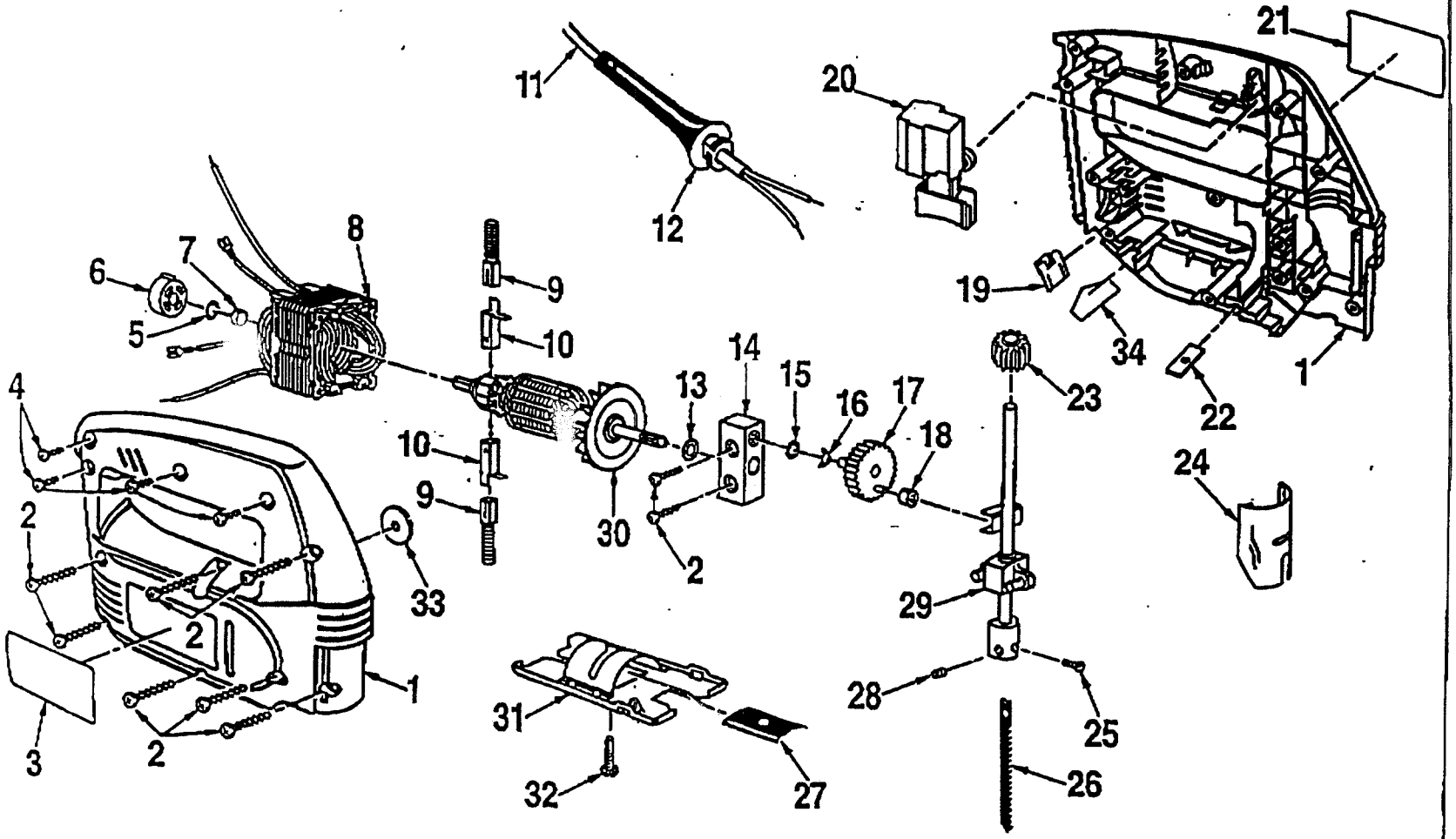

REF	PART NO.	DESCRIPTION	QTY	REF	PART NO.	DESCRIPTION	QTY
1	981217000	HOUSING ASSEMBLY	1	19	968594001	DOOR	1
2	990705015	SCREW	9	20	968303031	SWITCH	1
3	979507001	DATA PLATE	1	21	979506001	LOGO PLATE	1
4	990705006	SCREW	3	22	999263002	STRIP NUT	1
5	706382805	WASHER	1	23	968588001	HEAT SINK W/BEARING	1
6	990133001	SLEEVE BEARING	1	24	968533001	CHIP SHIELD	1
7	713513837	BUSHING	1	25	968525001	SCREW	1
8	968307034	FIELD ASSEMBLY	1	26		*SAW BLADE	1
9	968304017	BRUSH ASSEMBLY	2	27	968525002	CLAMP BAR	1
10	612255001	BRUSH TUBE	2	28	989594001	SET SCREW	1
11	969274015	CORD	1	29	971021001	SAW BAR ASSEMBLY	1
12	968602001	BEND RELIEF	1	30	968306107	ARMATURE	1
13	706239830	WASHER	1	31	970001000	BASE ASSEMBLY	1
14	968515002	BEARING BLOCK W/BEARING'S	1	32	999405001	SCREW	1
15	931744825	WASHER	1	33	623552001	STATOR PAD	1
16	622347001	WASHER	1	34	971236001	DECAL	1
17	968308003	GEAR ASSEMBLY	1	—	972000532	OWNER'S MANUAL	
18	615130001	BUSHING	1		*SEE CATALOG FOR ASSORTMENT		

Service Notes:

LANDSCAPEPOWER.COM